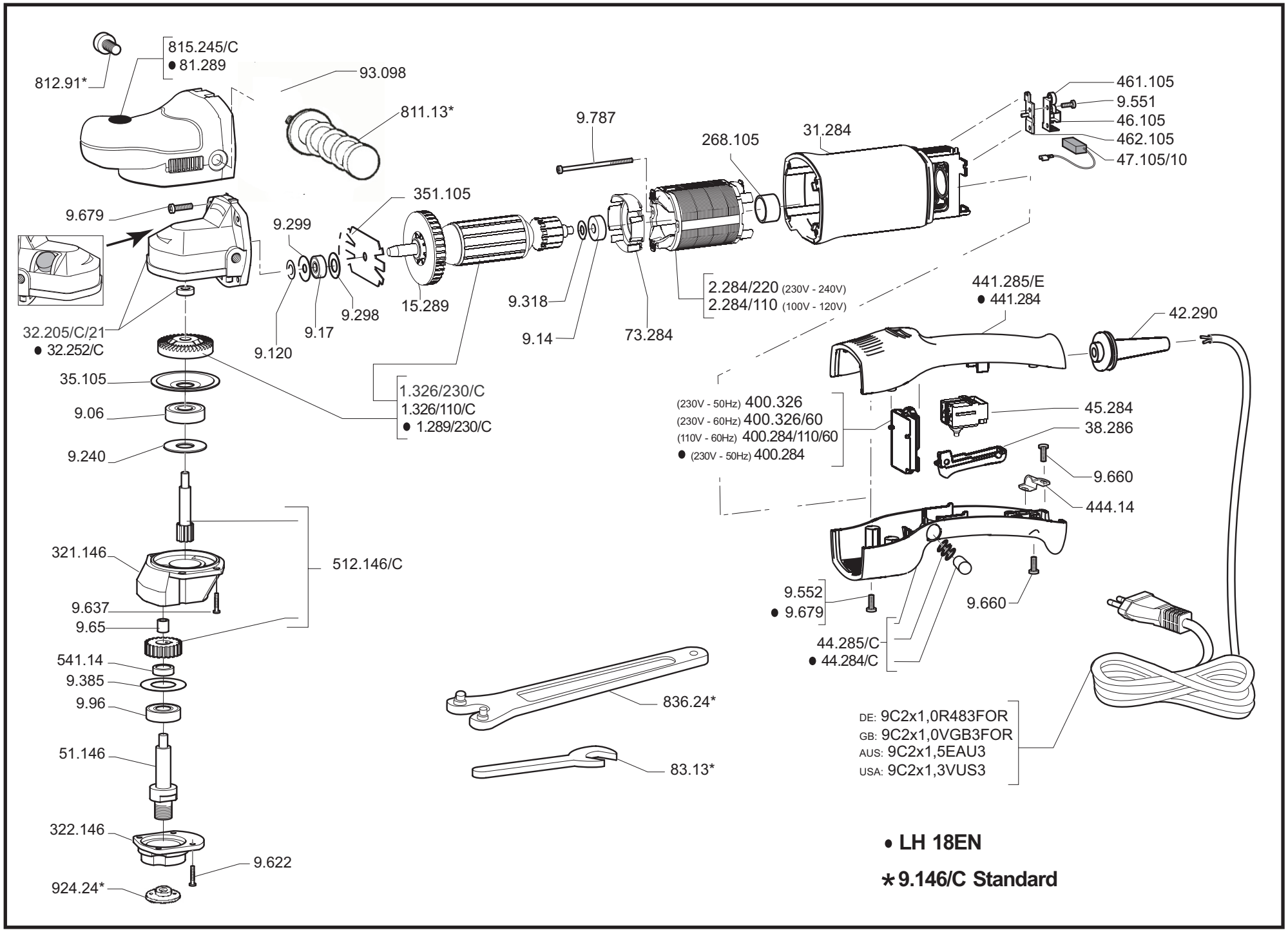
RUPES
LUCIDATRICE ANGOLARE
ANGULAR POLISHER
LH 18ENS
LH 18EN
812.91*
815.245/C
● 81.289
93.098
811.13*
9.787
268.105
31.284
461.105
9.551
46.105
462.105
47.105/10
9.679
351.105
9.299
32.205/C/21
● 32.252/C
9.120
9.17
9.298
15.289
9.318
9.14
73.284
2.284/220 (230V - 240V)
2.284/110 (100V - 120V)
441.285/E
● 441.284
42.290
35.105
9.06
9.240
1.326/230/C
1.326/110/C
● 1.289/230/C
(230V - 50Hz) 400.326
(230V - 60Hz) 400.326/60
(110V - 60Hz) 400.284/110/60
● (230V - 50Hz) 400.284
45.284
38.286
9.660
444.14
321.146
512.146/C
9.637
9.65
541.14
9.385
9.96
9.552
● 9.679
9.660
44.285/C
● 44.284/C
836.24*
83.13*
DE: 9C2x1,0R483FOR
GB: 9C2x1,0VGB3FOR
AUS: 9C2x1,5EAU3
USA: 9C2x1,3VUS3
51.146
322.146
9.622
924.24*
• LH 18EN
∗ 9.146/C Standard